Ontario Northland

555 Oak Street East
North Bay, Ontario
P1B 8L3

555, rue Oak Est
North Bay (Ontario)
P1B 8L3

Tel: 1-800-363-7512
www.ontarionorthland.ca

November 17, 2025

Addendum No. 01

File Reference Number: RFP 2025 093

Title: Engineering Services for Truck Shop Expansion

RE: Clarifications/Questions

QUESTIONS/CLARIFICATIONS:

Item 1: Does the ONTC have any site servicing records that they can share?

Answer: ONTC doesn't have much for records.

Item 2: Please confirm if a subsurface utility investigation will be required.

Answer: ONTC will provide locates.

Item 3: Will the ONTC be providing a topographic survey or is the proponent required to complete this?

Answer: Please refer to the Topographic Surveys attached at the end of this Addendum at Appendix A.

Item 4: Will the ONTC be providing design and specifications for the track design or is the proponent required to complete this?

Answer: Please refer to ONTC's Track Specifications attached at the end of this Addendum at Appendix B.

Item 5: Would it be possible to obtain the pre-engineered building drawings?

Answer: The existing building drawings are provided in the RFP at Appendix

…/2

Item 6: Are we to investigate the entire structure and make as-built drawings of the existing structure? Or are we to tie in the new structure with the existing

Answer: According to our Building Condition Assessment, the existing structure is in good condition. The intent is to tie the new structure into the existing.

Item 7: What is the height of the new addition?

Answer: Match the existing building height that is indicated in the original drawing set, elevation - drawing 4 (Page 4) of the RFP.

Item 8: Is the locomotive addition to be included in this proposal – if says future – there will be snow loading on the existing pre-Eng. Building?

Answer: A conceptual design shall be included for the locomotive addition only. This will be used budgetary purposes. Provide a summary and quote items if additional engineering services are required on the existing building for the snow loading.

Item 9: Are we responsible for Site Plan Approval (SPA) process, specifically providing the photometric design for the outdoor lighting?

Answer: No, ONTC wouldn't be concerned about this since the outdoor building lighting will be at the back of the building and away from the local city roadways and streets.

Item 10: Will the electrical engineer be responsible for coordinating the power upgrade with the local utility supplier, or will this coordination be handled by others?

Answer: The electrical engineer shall coordinate the power upgrade with the local utility supplier, and this shall be added to the Contract Administration Fees.

Item 11: In lieu of a Subject Matter Expert, would ONTC consider the prime consultant preparing a performance specification for the competitive bidding of turnkey spray booth and blast booth? It will offer a superior product, better service, and a more competitive pricing.

Answer: Yes, ONTC will consider this if the consultant can provide a turnkey solution for the spray and blast booths and can clearly indicate what will be included in the performance specification to meet the RFP evaluation criteria and mandatory requirements.

Item 12: Will ONTC agree to extend the submission deadline for this RFP?

Answer: Yes. The revised submission deadline is now **Friday, November 28, 2025 at 2:00:00 p.m.**

Please be advised that ***Section 1.6.1 - Key Dates*** of the RFP has been updated. The revised table is provided below for your reference.

…/3

1.6.1 Key Dates

Issue Date of RFP	Monday, November 03, 2025
Mandatory Site Visit	Not Applicable
Deadline for Questions	Monday, November 24, 2025
Deadline for Issuing Addenda	Wednesday, November 26, 2025
Submission Deadline	Friday, November 28, 2025 at 2:00:00 local time
Irrevocability Period	Ninety (90) calendar days

The RFP timetable is tentative only and may be changed by ONTC at any time.

Item 13: Please refer to revised Appendix B – RFP Particulars sections as follows:

- Section D – Mandatory Technical Requirements

Mandatory Requirement	Revised Mandatory Requirement
Paint, Blast, and Wash Booth Subject Matter Expert (SME) shall have at least five (5) years of proven experience in designing and supplying Paint and Blast booths. Subject Matter Expert should have experience working with Blast One, Nova Finishing Products, or an equivalent equal	Paint, Blast, and Wash Booth Subject Matter Expert (SME) shall have at least five (5) years of proven experience in designing and supplying Paint and Blast booths. Subject Matter Expert should have experience working with Blast One, Nova Finishing Products, or an equivalent equal. **A prime consultant, rather than an SME, will also be considered if they can explain in detail how they can provide a performance specification for a turnkey spray booth and blast booth solution for competitive bidding.**

- Section F - Evaluation Criteria - Technical Proposal Contents - Item No. 1.3: Experience and Qualifications:

Description	Revised Description
Experience and Qualifications: Proponents shall demonstrate their knowledge and expertise by providing references for **three (3) projects** of similar size and scope to confirm that Proponents has the experience and resources to complete the project. The project descriptions shall include: a) Client name and contact details b) Project scope and value c) Scheduled vs. actual start/end dates	**Experience and Qualifications:** Proponents shall demonstrate their knowledge and expertise by providing references for **three (3) projects** of similar size and scope to confirm that Proponents has the experience and resources to complete the project. The project descriptions shall include: a) Client name and contact details b) Project scope and value c) Scheduled vs. actual start/end dates

d) Description of work performed and use of subcontractors e) Outcomes (e.g., completed on schedule/budget) Proponents or their subconsultants/subcontractor can provide detailed engineering experience of paint and blast booths and/or projects in the railway industry. *ONTC may, in its sole discretion, confirm the Respondent's experience in the projects identified by contacting the named contacts above.*	d) Description of work performed and use of subcontractors e) Outcomes (e.g., completed on schedule/budget) Proponents or their subconsultants/subcontractor may receive higher scores for demonstrating detailed design and engineering experience related to paint booths and/or relevant projects in the railway industry. ONTC is not to be provided as a project reference. *ONTC may, in its sole discretion, confirm the Respondent's experience in the projects identified by contacting the named contacts above.*

- Section F - Evaluation Criteria - Technical Proposal Contents - Item No. 1.4: Resources

Description	Revised Description
Resources: Proponents shall demonstrate their ability to fulfil the requirements of the RFP. Include an organizational chart of the proposed team along with their resumes and Paint and Blast Booth Subject Matter Expert (SME) as outlined in the Mandatory Requirements.	Resources: Proponents shall demonstrate their ability to fulfil the requirements of the RFP. Include an organizational chart of the proposed team, along with their resumes and Paint and Blast Booth Subject Matter Expert (SME) as outlined in the Mandatory Requirements. **If a proponent decides to provide a performance specification for a turnkey spray booth and blast booth solution for competitive bidding, scoring will be determined by the details they provide.**

This Addendum hereby forms part of the RFP.

Regards,

Brinda Ranpura
Procurement Contracts Specialist
brinda.ranpura@ontarionorthland.ca

“Appendix A”

ONTARIO NORTHLAND RAILWAY

NORTH BAY TERMINALS

Scale 1 inch = 100 feet

REVISED BY R.C. BLAKE R.L. ANDRE — OCTOBER 30TH, 1962 — JULY 1962

JOINT — SECTION

EXCLUSIVE O.N.R. TRACKAGE

EXCLUSIVE C.N.R. TRACKAGE

JOINT O.N.R. C.N.R. TRACKAGE

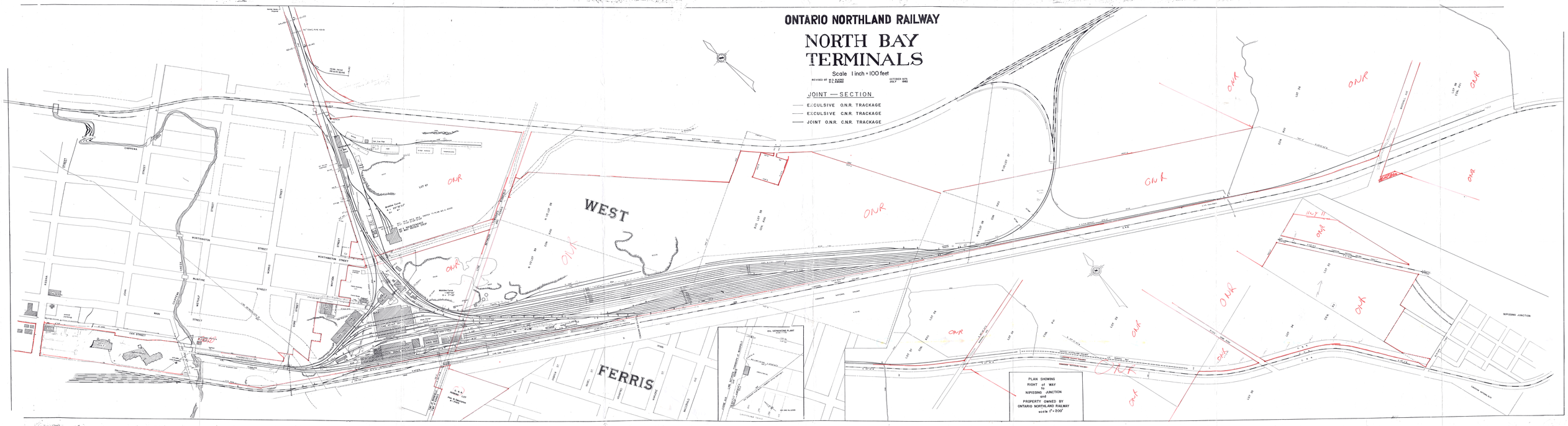

ONTC North Bay Rail Yard

Client: Ontario Northland Transit Commission

Project: North Bay Rail Yard Survey

Report Date: October 20, 2023

TULLOCH Project #: 232577

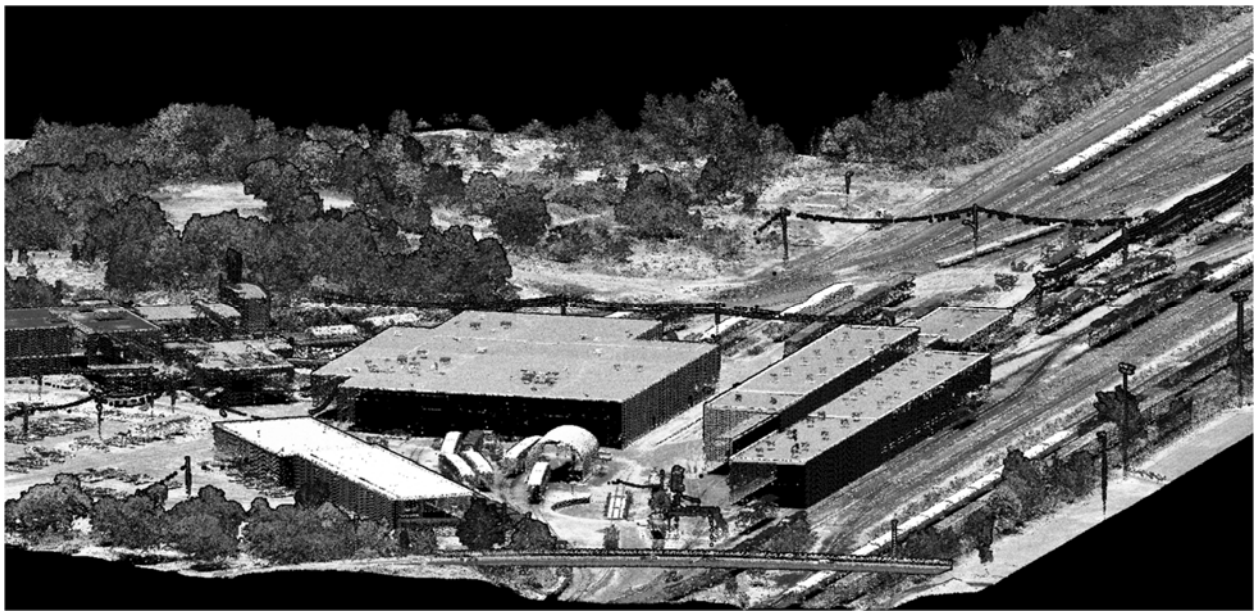

Contents

1. Project Summary 2
1.1 Location: 2
1.2 Client Information: 2
1.3 Coordinate Systems: 2
1.4 Survey Methods: 2
1.5 Project Deliverables: 2
2. Data Processing and QA\QC 3
2.1 ALS Registration Points 3
2.2 ALS Data Acquisition 4
2.3 Data Processing and QA/QC 5
2.4 LiDAR Data Classification 5
2.5 Project Anomalies 5
3. Appendix A – ALS Vertical Control report 7
4. Appendix B – Vertical Control Dz Histogram 11

Figures

Figure 1 Project Trajectory 4

Tables

Table 1: ALS Vertical Control Report (Full report is in Appendix A) 3
Table 2 LiDAR Classification 5

1. PROJECT SUMMARY

1.1 Location:

The Ontario Northland Transportation Commission (ONTC) North Bay rail yard is located in North Bay, Ontario. The site consists of an area that is approximately 0.48 km^2.

1.2 Client Information:

Company: AECOM
Address: 5090 Explorer Drive Suite 1000 Mississauga, Ontario, L4W 4X6, Canada
Contact Name: Manan Raval
Email: manan.raval@aecom.com

1.3 Coordinate Systems:

Acquisition Coordinate System
Reference Frame: NAD83 CSRS 2010 v7
Vertical Datum: CGVD28:78
Projection: UTM 17
Geoid Model: HT 2.0
Units: Meters

1.4 Survey Methods:

Airborne LiDAR Survey
- Airborne Survey Aircraft: R 44
- Altitude: 300 m AGL
- Aircraft speed: 70 kts
- Laser Scanner: Riegl VQ-480i
- Laser Pulse Repetition Rate (PRR): 400 kHz

Airborne Photo Survey
- Airborne Survey Aircraft: R 44
- Altitude: 1270 m AGL
- Aircraft speed: 80 kts
- Laser Scanner: PhaseOne iXM-100

1.5 Project Deliverables:

- LiDAR data classified per project table in LAS.
- Ground Model Key Points (MKP) in ASCII x,y,z format.
- 0.25m smoothed contours in DWG format.
- 6cm Ortho imagery in Geo Tiff Format

The North Bay Yard LiDAR project involved the acquisition of Airborne LiDAR (ALS) and Orthophoto for approximately 0.5 km^2 located in North Bay, Ontario. Tasks included collecting project control, performing an airborne LiDAR and Orthophoto survey, generating point cloud and orthophotos. The file deliverables are noted in the Project Deliverable section.

Tulloch employed an airborne LiDAR system to map the area of interest. The survey data was collected onboard a Roberston R-44 on August 4th, 2023. The LiDAR was collected with a Riegl VQ-480i system, and the Orthophoto was collected using a PhaseOne iXM-100 camera.

The VQ-480i Airborne data were processed, checked, and verified for completeness, coverage, and relative integrity. On average, the point density was observed at approximately 40 pts/m^2 on the hard and flat surfaces in open areas. In the calibration phase, the data were checked in detail for relative alignment (Flightline to Flightline within passes and Flightline pass to Flightline pass) to ensure the data met system and project specifications. The final data were compared to the registration points through a vertical control report, as per Table 1 below.

Table 1: ALS Vertical Control Report (Full report is in Appendix A)

	Δz (m)
Average	-0.016
Minimum	-0.067
Maximum	+0.030
Average Magnitude	0.018
RMSe	0.023
Std. Deviation	0.015

LiDAR accuracy for the project was met under the project specifications.

2. DATA PROCESSING AND QA\QC

2.1 ALS Registration Points

Registration points were surveyed throughout the project to calibrate and constrain the ALS survey. ALS control points were surveyed using RTK sessions. The RTK sessions were tied to project control by PPP sessions. Registration points have been collected using the following feature codes. The control report in Appendix A contains the following codes: AE: Asphalt Edge, AS: Asphalt String, CB: Catch Basian, CR: Crown of Road, ES: Edge of Shoulder, Gate: Gate line at ground, GS: Gravel String, MH: Maintenance Lid, PS: Paint Striping, SW: Side Walk, Target: Photo Target, and WV: Water Valve.

2.2 ALS Data Acquisition

Data airborne acquisition took place on August 4th, during optimal GPS windows. The project trajectory is displayed as red lines in Figure 1. The Can-Net station in North Bay was used as a base station during the acquisition for both flights. System trajectory was post-processed using kinematic software (TerraPOS).

Figure 1 Project Trajectory

2.3 Data Processing and QA/QC

Data processing began upon airborne acquisition completion, where data were checked for completeness and coverage. Once the trajectory was processed, it was used to register and geo-reference the point cloud. Next, airborne data were adjusted to the project control using the registration points. The geo-referenced point cloud data was then QA'd using multiple profiles to detect flight lines offset by roll, pitch or heading.

Surface models were created using classified ground points from the LAS. Models were checked for any anomalies in the surface point cloud classification.

2.4 LiDAR Data Classification

The LiDAR data has been classified through automatic routines and manual verification. Points in the LAS data tiles have a class attribute assigned to each point. The used classes are listed in table 2 below.

Table 2 LiDAR Classification

LiDAR Class	Description
Class 2	Ground
Class 3	Low Vegetation
Class 5	High Vegetation
Class 6	Building
Class 7	Low Point

2.5 LiDAR Deliverables

Classified LiDAR data tiles

Calibrated LiDAR strips were processed into 500m x 500m data tiles. An automatic macro was used to generate ground-classified points. The lowest points based on the surrounding points are classified as ground. Points above the ground are then classified as low and high points based on height above the ground classification. Low vegetation are points up to 2m above the ground points. High vegetation are points more than 2m above the ground classified points. An analyst then reviews the auto-classified points to confirm the ground classification. Buildings are then manually classified.

Ground Model Key Points

Ground model Key Points (MKP) are generated from the ground-classified data. MKP represents the minimum number of points required to model the surface. The ground data is first classified based on a 5m grid. If the ground-classified points inside the 5m grid are within +/- 20cm, they are excluded from the MKP data set. This maintains the definition on the surface with the minimum number of points.

0.25m Smoothed Contours

Contours are generated from the ground-classified data. Minor contours are generated at a 0.25m interval. Major contours are generated at 1.25m intervals. Contours have been exported in an AutoCAD dwg format.

2.6 Project Anomalies

No project anomalies were identified while reviewing the LiDAR data or products.

3. APPENDIX A – ALS VERTICAL CONTROL REPORT

Number	Easting	Northing	Known Z	Laser Z	Dz
20016_AE	619036.059	5128186.259	197.944	197.948	+0.004
20021_AE	619030.579	5128183.790	197.774	197.767	-0.007
20022_CR	619026.863	5128182.698	197.823	197.803	-0.020
20023_AE	619023.318	5128181.395	197.835	197.798	-0.037
20030_AE	619030.531	5128163.898	197.847	197.837	-0.010
20031_CR	619033.886	5128165.096	197.906	197.897	-0.009
20032_AE	619037.130	5128166.464	197.825	197.815	-0.010
20037_AE	619041.291	5128168.807	197.867	197.821	-0.046
20038_AE	619044.500	5128169.955	197.853	197.868	+0.015
20046_AE	619043.981	5128149.159	197.882	197.871	-0.011
20047_CR	619040.793	5128147.994	197.958	197.941	-0.017
20048_AE	619037.508	5128146.820	197.929	197.924	-0.005
20051_MH	619043.796	5128146.792	197.944	197.911	-0.033
20052_MH	619010.471	5128208.552	197.683	197.688	+0.005
20053_MH	619008.804	5128213.277	197.838	197.830	-0.008
20054_CB	618965.836	5128197.116	197.425	197.413	-0.012
20055_CB	618969.642	5128185.488	197.418	197.378	-0.040
20056_PS STOP	618950.036	5128183.348	197.656	197.659	+0.003
20057_PS STOP	618949.487	5128183.229	197.676	197.671	-0.005
20058_PS STOP	618946.113	5128193.360	197.553	197.554	+0.001
20059_PS STOP	618947.083	5128193.026	197.548	197.547	-0.001
20064_CB	619038.617	5128222.104	197.626	197.582	-0.044
20065_CB	619075.719	5128226.201	197.970	197.940	-0.030
20067_AE	618711.981	5128095.752	197.245	197.229	-0.016
20068_CR	618714.691	5128086.756	197.394	197.391	-0.003
20069_AE	618715.948	5128083.355	197.322	197.308	-0.014
20072_AE	618717.516	5128078.261	197.415	197.418	+0.003
20076_AE	618732.414	5128089.821	197.303	197.284	-0.019
20077_CR	618731.080	5128093.197	197.409	197.404	-0.005
20078_AE	618728.402	5128100.870	197.254	197.251	-0.003
20079_SW	618728.448	5128100.918	197.257	197.251	-0.006
20080_SW	618727.872	5128102.272	197.284	197.281	-0.003
20085_SW	618745.334	5128109.304	197.306	197.336	+0.030
20086_SW	618745.860	5128107.955	197.283	197.283	+0.000
20087_AE	618745.885	5128107.922	197.285	197.284	-0.001
20088_CR	618748.644	5128099.995	197.391	197.392	+0.001
20089_AE	618749.974	5128096.803	197.245	197.270	+0.025
20093_MH	618731.943	5128082.843	197.280	197.256	-0.024
20094_MH	618722.720	5128089.154	197.333	197.321	-0.012
20121_PS STOP	618895.513	5128173.942	197.574	197.565	-0.009
20122_PS STOP	618895.696	5128173.684	197.586	197.572	-0.014
20123_PS STOP	618895.665	5128173.332	197.590	197.581	-0.009
20124_PS CW	618942.270	5128193.960	197.597	197.600	+0.003
20125_PS CW	618942.202	5128193.811	197.609	197.605	-0.004
20126_PS CW	618921.528	5128186.261	197.698	197.682	-0.016
20127_PS CW	618921.660	5128186.181	197.694	197.686	-0.008
20095_AS	619935.486	5127573.511	198.666	198.656	-0.010
20096_AS	619931.547	5127571.931	198.482	198.474	-0.008

20097_AE	619929.625	5127571.536	198.451	198.456	+0.005
20098_CR	619926.893	5127570.602	198.481	198.466	-0.015
20099_AE	619922.178	5127569.138	198.400	198.396	-0.004
20108_AE	619929.048	5127551.775	198.307	198.319	+0.012
20109_CR	619932.680	5127553.134	198.339	198.333	-0.006
20110_AE	619936.292	5127554.471	198.341	198.318	-0.023
20111_AS	619938.499	5127555.335	198.366	198.367	+0.001
20112_AS	619942.731	5127557.038	198.640	198.616	-0.024
20113_AS	619948.984	5127540.525	198.046	198.021	-0.025
20114_AS	619945.065	5127538.986	198.258	198.248	-0.010
20115_AE	619942.791	5127538.186	198.243	198.216	-0.027
20116_CR	619939.007	5127536.943	198.290	198.277	-0.013
20117_AE	619935.341	5127535.574	198.252	198.241	-0.011
20118_AS	619933.021	5127534.706	198.413	198.400	-0.013
20119_AS	619929.543	5127533.310	198.641	198.626	-0.015
20120_MH	619914.468	5127598.022	198.656	198.623	-0.033
20132_MH	619935.631	5127545.646	198.386	198.349	-0.037
20137_AE	620247.180	5127275.457	197.755	197.708	-0.047
20138_CR	620249.525	5127277.933	197.777	197.744	-0.033
20139_AE	620251.536	5127280.153	197.723	197.700	-0.023
20144_AS	620271.136	5127273.138	197.828	197.811	-0.017
20145_AS	620268.485	5127270.248	197.714	197.699	-0.015
20146_AE	620266.722	5127268.255	197.630	197.613	-0.017
20147_CR	620264.830	5127265.964	197.703	197.705	+0.002
20148_AE	620262.764	5127263.305	197.687	197.674	-0.013
20152_AS	620273.212	5127246.656	197.744	197.741	-0.003
20153_AS	620275.873	5127249.727	197.651	197.652	+0.001
20154_AE	620277.542	5127251.706	197.697	197.692	-0.005
20155_CR	620279.614	5127254.174	197.762	197.747	-0.015
20156_AE	620281.599	5127256.506	197.647	197.646	-0.001
20163_MH	620284.038	5127250.556	197.749	197.733	-0.016
20169_AE	619552.995	5127821.470	197.839	197.818	-0.021
20170_CR	619555.097	5127824.439	197.894	197.882	-0.012
20171_AE	619557.513	5127827.319	197.829	197.831	+0.002
20185_AE	619572.312	5127815.681	197.828	197.824	-0.004
20186_CR	619569.974	5127812.606	197.906	197.904	-0.002
20187_AE	619567.825	5127809.749	197.830	197.832	+0.002
20188_AS	619566.331	5127807.915	197.976	197.981	+0.005
20189_AS	619566.194	5127807.688	198.042	198.019	-0.023
20190_AS	619566.036	5127807.497	198.011	198.015	+0.004
20191_AS	619564.909	5127806.088	198.169	198.144	-0.025
20192_AS	619563.790	5127804.724	198.246	198.236	-0.010
20199_AE	619582.913	5127797.956	197.821	197.823	+0.002
20200_CR	619585.177	5127800.689	197.908	197.904	-0.004
20201_AE	619587.512	5127803.847	197.846	197.856	+0.010
20202_AS	619589.224	5127806.003	198.041	198.035	-0.006
20203_AS	619591.309	5127808.516	198.274	198.259	-0.015
20204_MH	619594.025	5127793.599	197.934	197.913	-0.021
20205_MH	619594.941	5127789.607	197.855	197.852	-0.003
20211_AE	619215.767	5128657.025	203.684	203.664	-0.020
20212_CR	619214.079	5128659.736	203.801	203.774	-0.027
20213_AE	619212.347	5128662.443	203.738	203.732	-0.006
20220_AE	619195.944	5128652.376	204.009	203.993	-0.016

20221_CR	619197.752	5128649.293	204.126	204.079	-0.047
20222_AE	619199.334	5128646.583	204.048	204.016	-0.032
20230_AE	619184.160	5128636.018	204.324	204.293	-0.031
20231_CR	619181.200	5128639.834	204.347	204.327	-0.020
20232_AE	619179.444	5128642.458	204.283	204.260	-0.023
20237_WV	619182.560	5128638.195	204.343	204.307	-0.036
20238_MH	619182.189	5128641.420	204.319	204.304	-0.015
20239_MH	619170.000	5128633.719	204.382	204.347	-0.035
20240_MH	619168.397	5128634.769	204.395	204.334	-0.061
20241_WV	619166.880	5128644.052	204.617	204.588	-0.029
20246_MH	619143.623	5128676.079	203.387	203.349	-0.038
20247_WV	619147.542	5128677.372	203.352	203.336	-0.016
20248_MH	619134.292	5128688.291	204.321	204.313	-0.008
20249_MH	619082.765	5128769.558	207.997	207.950	-0.047
20251_PS	619031.329	5128736.990	204.612	204.584	-0.028
20252_PS	619031.281	5128737.085	204.611	204.584	-0.027
20253_PS	619008.895	5128722.619	203.952	203.929	-0.023
20254_PS	619008.958	5128722.533	203.948	203.932	-0.016
20255_WV	619010.589	5128718.557	203.817	203.793	-0.024
20256_MH	619001.322	5128714.949	203.743	203.717	-0.026
20257_WV	619006.156	5128709.341	203.502	203.490	-0.012
20259_MH	618993.088	5128722.700	203.933	203.914	-0.019
20260_MH	619018.955	5128686.109	202.849	202.814	-0.035
20262_CB	619036.064	5128651.996	201.965	201.936	-0.029
20263_CB	619043.330	5128642.676	202.110	202.067	-0.043
20264_MH	619043.202	5128648.009	202.275	202.248	-0.027
20265_WV	619035.108	5128643.821	202.213	202.182	-0.031
20266_WV	619033.091	5128642.921	202.172	202.158	-0.014
20270_AE	618984.117	5128607.806	202.273	202.250	-0.023
20271_CR	618982.395	5128610.928	202.307	202.287	-0.020
20272_AE	618980.620	5128613.796	202.252	202.252	+0.000
20273_ES	618980.398	5128614.223	202.267	202.266	-0.001
20274_GS	618979.780	5128615.436	202.263	202.276	+0.013
20275_GS	618978.818	5128617.578	202.290	202.274	-0.016
20276_GS	618993.921	5128627.933	202.258	202.257	-0.001
20277_GS	618996.184	5128625.189	202.271	202.260	-0.011
20279_AE	618997.197	5128623.556	202.175	202.169	-0.006
20280_CR	618998.799	5128621.180	202.256	202.229	-0.027
20281_AE	619000.879	5128617.963	202.242	202.222	-0.020
20282_AS	619002.003	5128616.138	202.247	202.227	-0.020
20283_AS	619003.436	5128614.319	202.271	202.258	-0.013
20290_AE	619016.310	5128627.846	202.204	202.169	-0.035
20291_CR	619014.703	5128630.610	202.219	202.194	-0.025
20292_AE	619013.624	5128633.785	202.179	202.160	-0.019
20294_GS	619012.650	5128636.201	202.256	202.249	-0.007
20295_GS	619011.059	5128638.727	202.344	202.317	-0.027
20296_CB	619072.702	5128593.716	201.769	201.737	-0.032
20297_CB	619086.428	5128590.667	201.634	201.591	-0.043
20298_CB	619095.169	5128590.992	201.507	201.460	-0.047
20299_CB	619095.925	5128591.423	201.517	201.463	-0.054
20300_CB	619099.752	5128585.194	201.514	201.483	-0.031
20302_WV	619097.007	5128584.400	201.537	201.531	-0.006
20303_CB	619096.799	5128574.053	201.560	201.528	-0.032

20304_WV	619088.119	5128579.376	201.763	201.751	-0.012
20305_MH	619085.544	5128580.662	201.839	201.813	-0.026
20306_MH	619082.429	5128580.043	201.932	201.920	-0.012
20308_MH	619099.322	5128553.389	201.441	201.417	-0.024
20309_MH	619126.426	5128606.208	201.912	201.901	-0.011
20310_MH	619225.525	5128562.472	202.792	202.755	-0.037
20311_GRATE	619232.334	5128552.902	202.563	202.542	-0.021
20312_GRATE	619231.949	5128552.137	202.593	202.578	-0.015
20313_GRATE	619232.727	5128551.745	202.550	202.550	+0.000
20314_GRATE	619233.093	5128552.510	202.524	202.502	-0.022
20323_AE	620011.579	5128178.609	199.554	199.557	+0.003
20324_CR	620009.800	5128176.184	199.631	199.588	-0.043
20325_AE	620008.013	5128173.823	199.572	199.542	-0.030
20334_AE	620021.869	5128163.359	199.524	199.493	-0.031
20335_CR	620023.606	5128165.857	199.565	199.525	-0.040
20336_AE	620025.119	5128167.976	199.555	199.511	-0.044
20345_AE	620039.595	5128157.201	199.555	199.536	-0.019
20346_CR	620037.734	5128155.146	199.631	199.601	-0.030
20347_AE	620035.802	5128152.816	199.548	199.510	-0.038
20361_AE	619414.476	5128455.230	203.441	203.426	-0.015
20362_CR	619412.209	5128451.900	203.551	203.517	-0.034
20363_AE	619410.477	5128449.030	203.463	203.443	-0.020
20375_AE	619392.201	5128460.776	203.442	203.446	+0.004
20376_CR	619393.760	5128463.659	203.551	203.523	-0.028
20377_AE	619395.504	5128466.453	203.496	203.466	-0.030
20390_AE	619378.619	5128477.984	203.422	203.400	-0.022
20391_CR	619376.397	5128474.877	203.493	203.452	-0.041
20392_AE	619374.070	5128471.612	203.355	203.345	-0.010
25818_TARGET PT	620752.694	5127063.721	197.413	197.415	+0.002

Average dz	-0.016
Minimum dz	-0.061
Maximum dz	+0.030
Average magnitude	0.018
Root mean square	0.023
Std deviation	0.015

4. APPENDIX B – VERTICAL CONTROL DZ HISTOGRAM

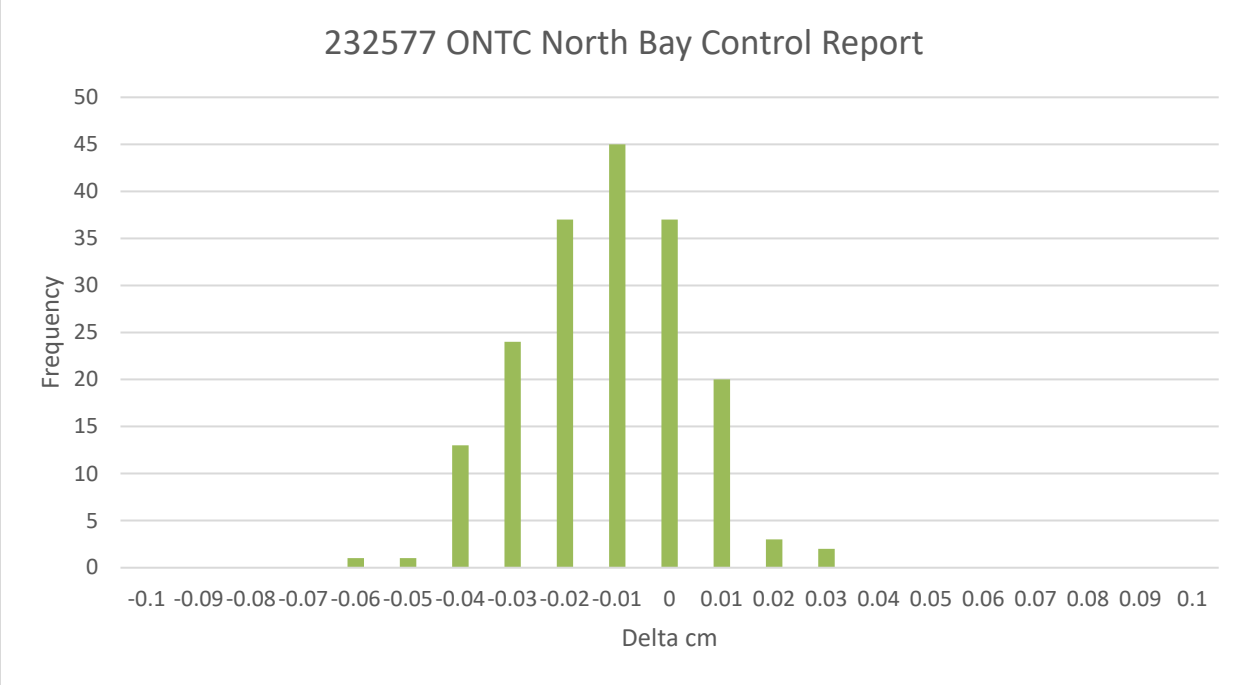

Figure 2 Vertical Control Dz Histogram (LiDAR values minus control)

SKETCH SHOWING TOPOGRAPHIC INFORMATION FOR THE ONTC NORTH BAY SHOP COMPLEX AND UNDERGROUND DRAINAGE

SCALE 1 : 1000

TULLOCH GEOMATICS INC.
2023

THE INTENDED PLOT SIZE OF THIS PLAN IS 3159mm IN WIDTH BY 2159mm IN HEIGHT WHEN PLOTTED AT A SCALE OF 1:1000.

© THE REPRODUCTION, ALTERATION, OR USE OF THIS SKETCH IN WHOLE OR IN PART WITHOUT THE EXPRESS PERMISSION OF TULLOCH GEOMATICS INC. O.L.S. IS STRICTLY PROHIBITED.

DATE:

TOPOGRAPHIC INFORMATION COLLECTED BETWEEN JULY 24 AND NOVEMBER 16, 2023.

METRIC:

DISTANCES AND ELEVATIONS SHOWN ON THIS PLAN ARE IN METRES AND CAN BE CONVERTED TO FEET BY DIVIDING BY 0.3048.

COORDINATE SYSTEM:

UTM ZONE 17, NAD83 (CSRS) (2010.0)

ELEVATION NOTE:

ELEVATIONS SHOWN HEREON ARE GEODETIC, ARE REFERRED TO THE CANADIAN GEODETIC VERTICAL DATUM OF 1928 (CGVD28) AND ARE DERIVED FROM REAL TIME NETWORK (RTN) OBSERVATIONS.

CONTOURS SHOWN ON THIS PLAN ARE DERIVED FROM AIRBORNE LIDAR FLOWN ON AUGUST 4th, 2023.

CONTOUR INTERVAL = 0.25m

DRAINAGE INVERT NOTE:

PLAN TO BE ACCOMPANIED BY PROJECT INVERT CALCULATION SHEET. PLEASE SEE FILE 232577 ONTC INVERT COMPUTATION SHEET FOR INVERT INFORMATION.

GEOGRAPHIC LOCATION NOTE:

PART OF THE GEOGRAPHIC TOWNSHIP OF WIDDIFIELD AND PART OF THE GEOGRAPHIC TOWNSHIP OF WEST FERRIS IN THE CITY OF NORTH BAY

LEGEND

RW	DENOTES RETAINING WALL
BLD	DENOTES BUILDING
TF	DENOTES TRAFFIC LIGHT
CLF	DENOTES CHAINLINK FENCE
WF	DENOTES WOOD RAIL FENCE
BF	DENOTES BOARD FENCE
HP	DENOTES HYDRO POLE
MW	DENOTES MONITORING WELL
AN	DENOTES POLE ANCHOR
HP	DENOTES HYDRO POLE
BP	DENOTES BELL POLE
SS	DENOTES BELL STANDARD
RW	DENOTES RETAINING WALL
CSP	DENOTES CORRUGATED STEEL PIPE
CP	DENOTES CONCRETE PIPE
PP	DENOTES PLASTIC PIPE
HDPE	DENOTES HIGH DENSITY POLYETHYLENE PIPE
RFO	DENOTES REINFORCED OPEN CONCRETE CULVERT
BOL	DENOTES BOLLARD
SI	DENOTES SIGN
RKO	DENOTES ROCK OUTCROP
SP	DENOTES STOCK PILE
FH	DENOTES FIRE HYDRANT
WV	DENOTES WATER VALVE
RWD	DENOTES RAILWAY DERAILER
RSS	DENOTES RAILWAY SWITCH STAND
RLS	DENOTES RAILWAY SIGN/SIGNAL
TP	DENOTES TELEGRAPH POLE
SBGR	DENOTES STEEL BEAM GUARD RAIL
□ DI	DENOTES DITCH INLET
○ MH	DENOTES MAINTENANCE HOLE
□ CB	DENOTES CATCH BASIN
○	DENOTES TREE
———————	DENOTES RAILWAY TOP OF RAIL
———————	DENOTES TREE LINE
———————	DENOTES FENCE LINE

CAUTION:

THIS IS NOT A PLAN OF SURVEY AND SHALL NOT BE USED EXCEPT FOR THE PURPOSE INDICATED IN THE TITLE BLOCK.

THE PROPERTY BOUNDARIES ON THIS SKETCH HAVE BEEN COMPILED FROM FIELD SURVEY EFFORTS AND LAND REGISTRY PLANS AND HAVE NOT BEEN CONFIRMED.

THIS SKETCH REPRESENTS THE BEST INFORMATION AVAILABLE AT THE TIME OF PREPARATION. THIS SKETCH WAS PREPARED FOR DISCUSSION PURPOSE ONLY AND ASSUMES NO RESPONSIBILITY FOR THE LOCATION OF ANY UNDERGROUND CONDUITS, PIPES OR OTHER FACILITIES WHETHER SHOWN OR OMITTED FROM THIS SKETCH. ALL UNDERGROUND FACILITIES SHOULD BE LOCATED BY THE RESPECTIVE AUTHORITIES PRIOR TO CONSTRUCTION.

TULLOCH
TULLOCH GEOMATICS INC.
80 MAIN ST. W.
NORTH BAY, ON
P1A 1B8
T 705 -784-7661
F 705 -784-7664
877 -735-0205
tulloch@tulloch.ca

DRAWN: BH CHK'D: JT FILE: 232577

ACAD FILE:P:\2023\232577 ONTC Topographic Survey — North Bay Shop\Deliverables\CAD Production\232 Working Drawings\232577 ONTC Topographic Survey.dwg

APPENDIX A

Building Condition Assessment Report

Project No. 21096

© Copyright 2022 Roth IAMS Ltd - All rights reserved

Roth IAMS
Integrated Asset Management Strategies

A Substructure
A10 Foundations

Element Description	
Name	A101001 - Standard Foundations
Installation Year	1985
Condition	1 - Excellent
Expected Useful Life	75 Years
Remaining Useful Life	38 Years
Renewal Year	2060
Quantity / Unit of Measure	185 / LM Footprint
Unit Cost	$984.00
Difficulty / Regional / Soft Cost Factors	1.00 / 1.30000 / 1.30000
Replacement Cost	$307,647.60

Description

The single-storey structure without a basement is constructed on concrete strip-footings that bear on engineered fill.

Condition Narrative

No significant deficiencies were observed or reported on the superstructure to suggest differential settlement of the building foundations. Since this element is mostly below grade and is concealed, no photographs are available to confirm the construction and condition.

Photos

North Bay New Maintenance of Way Shop - A101001

North Bay New Maintenance of Way Shop - A101001

North Bay New Maintenance of Way Shop - A101001

Element Description	
Name	A103001 - Slab on Grade
Installation Year	1985
Condition	1 - Excellent
Expected Useful Life	75 Years
Remaining Useful Life	38 Years
Renewal Year	2060
Quantity / Unit of Measure	992 / SM Footprint
Unit Cost	$71.33
Difficulty / Regional / Soft Cost Factors	1.00 / 1.30000 / 1.30000
Replacement Cost	$119,583.32

Description

The slab-on-grade, which is likely non-structural, is poured concrete continuously supported likely on a moisture barrier on a free draining gravel layer on engineered fill.

Condition Narrative

No significant deficiencies were observed or reported. At the observed isolated cracks, no significant elevation difference to suggest differential settlement of the concrete slab-on-grade was noted. Recommend that the cracks be monitored and should significantly change be noted a licensed engineer be retained to evaluate the performance of the concrete slab-on-grade.

Photos

North Bay New Maintenance of Way Shop - A103001

North Bay New Maintenance of Way Shop - A103001

B Shell
B10 Superstructure

Element Description	
Name	B103001 - Structure
Installation Year	1985
Condition	2 - Good
Expected Useful Life	75 Years
Remaining Useful Life	38 Years
Renewal Year	2060
Quantity / Unit of Measure	992 / SM Building
Unit Cost	$280.00
Difficulty / Regional / Soft Cost Factors	1.00 / 1.30000 / 1.30000
Replacement Cost	$469,414.40

Description

The building is a pre-engineered steel-framed structure, where tapered columns connected to roof beams support the roof metal deck on purlins.

Condition Narrative

No significant deterioration was noted to suggest movement or twisting of the building structure.

Photos

North Bay New Maintenance of Way Shop - B103001

North Bay New Maintenance of Way Shop - B103001

B20 Exterior Enclosure

Element Description	
Name	B201021 - Masonry
Installation Year	1985
Condition	1 - Excellent
Expected Useful Life	75 Years
Remaining Useful Life	38 Years
Renewal Year	2060
Quantity / Unit of Measure	360 / SM
Unit Cost	$600.00
Difficulty / Regional / Soft Cost Factors	1.00 / 1.30000 / 1.30000
Replacement Cost	$365,040.00

Description

The exterior wall system in the office area and grade level of the garage bay are concrete masonry walls, where the face brick is tied to the substrate by brick headers.

Condition Narrative

No significant deficiencies were observed or reported. However, a crack was observed in the southeast entrances. Repair is recommended to keep the system functional.

Photos

North Bay New Maintenance of Way Shop - B201021

North Bay New Maintenance of Way Shop - B201021

North Bay New Maintenance of Way Shop - B201021

North Bay New Maintenance of Way Shop - B201021

Recommendations

Recommendations #1 - Masonry	
Type	Major Repair
Year	2022
Cost	$73,000.00
Priority	Priority D: Building Functionality

A crack was observed in the southeast entrances. Repair is recommended to keep the system functional.

“Appendix B”

Prepared Rock Ballast – Specifications

1. Scope

   This specification covers the requirements for grading and other significant physical properties of mineral aggregates for prepared ballast.

2. General Requirements

   Prepared ballast shall be crushed stone comprised of angular, hard, strong, and durable particles free from injurious amounts of deleterious substances and conforming to the requirements of these specifications.

   The Suppliers/Contractor shall, at their own expense, furnish all and every kind of labour, tools, machinery and other plant, services and material whatsoever necessary for the preparation and delivery to the Ontario Northland Transportation Commission (ONTC) of:

   - **9,000 tonnes on the Ramore Subdivision at Jardine.**
   - **20,000 tonnes on the Temagami subdivision at Rabbit Creek Pit.**
   - **46,000 tonnes on the Devonshire Subdivision between Porquis and Cochrane.**

   The stone ballast shall be prepared in every respect to the satisfaction of the Rail Infrastructure Department in the manner and upon the terms herein specified and according to specifications below and shall deliver to ONTC in stockpile locations as specified in the RFP Documents and at such time as required by the Rail Infrastructure Department to suit the aforesaid proposals which will form part of the contract.

   Please note that crushed rock for the various locations is required as follows:

   - **The total order must be completed and delivered by June 14, 2024.**

   Ability to deliver as per the above schedule is of critical importance in the evaluation of the Proposals. In their responses, Respondents must stipulate in writing that they have the material, equipment, and manpower to deliver as required above.

3. Quality Requirements

   a) Deleterious substances shall not be present in prepared ballast in excess of the following amounts:

   - Soft and pliable pieces 5%
   - Material finer than 200 sieve 1%

b) The percentage of wear of prepared ballast as tested in the Los Angeles machine shall not be greater than 40% except otherwise specified by the Director, Rail Infrastructure.

c) The soundness of prepared ballast shall be such that when tested in the sodium sulphate or magnesium sulphate soundness tests, the weighted average loss shall not exceed 10% after 5 cycles.

4. Gradation Requirements

a) The grading of prepared ballast shall be determined by test with laboratory sieves having square openings and conforming to current ASTM specification designated E-11.

b) Crushed stone prepared ballast shall conform to the following requirements for grading:

	Normal Size Square Opening	Amounts Finer than Each Sieve (Square Opening Laboratory Sieves) % by Weight						
Sieve Size		2”	1 ½”	1”	¾”	½”	3/8”	No.4
% passing by Weight	1 ½” – ¾”	100	90-100	20-55	0-15		0-5	

5. Washing Ballast

The Supplier/Contractor shall use adequate washing procedures of the crushed stone or suitable dust-control methods to ensure that dust from crushing operation is not carried in the direction of the scales or the stockpile of the prepared stone from where it is loaded in railway hopper cars. If washing and dust control is not included in the unit price (tonne), it must be identified and shown as a separate unit cost on Proposal Form 1 A.

All Rock ballast crushed for Ontario Northland must be washed with high-pressure water nozzles in conjunction with a screening plant. Washing of any ballast will be in the final stage of the crushing operation prior to ballast being dumped into a hopper or waiting trucks.

The washed ballast must meet the acceptance of the Director Rail Infrastructure or his representative. Any ballast which fails to comply with this requirement will be rejected.

6. Handling

Prepared ballast shall be handled at the producing plant in such a manner that is kept clean and free from segregation. It shall be loaded only into trucks which are in good order, tight enough to prevent leakage and waste of material, and which are clean and free from rubbish or any substance which would foul or damage ballast.

7. Scaling and Inspection

The Successful Respondent(s) will be responsible for weighing and inspecting the crushed rock ballast to ensure total compliance with quantity ordered and with all specifications. Successful contractors will be required to provide gradation charts and, from time to time, samples of the crushed rock ballast. ONTC reserves the right of random inspections at the crushing site(s) and to shut down the crushing operation at any time if the crushed rock is not found to meet any and all specifications.

8. Testing

Samples of the finished product for gradation and other required tests shall be taken from each 500 tonnes of prepared ballast, unless otherwise ordered by the Rail Infrastructure Department. The samples shall be representative and shall weigh not less than 50 pounds. The gradation of the samples is plotted on Ontario Northland Drawing No. A-4222 (A).

9. Methods of Test

a) Samples shall be secured in accordance with the current ASTM Method of Test, designation D75.
b) Sieve analysis shall be made in accordance with the current ASTM Method of Test, designation C136.
c) Material finer than the No.200 sieve shall be determined in accordance with the current ASTM Method of Test, designation C117-61T.
d) The percentage of soft particles shall be determined in accordance with the current ASTM Method of Test, designation C235-57T.
e) The resistance to abrasion shall be determined in accordance with the current ASTM Method of Test, designation C131-55, using the standard grading most nearly representative of the size of ballast specified.
f) Soundness tests shall be made in accordance with the current ASTM Method of Test, designation C88-61T.
g) The weight per cubic foot shall be determined in accordance with the current ASTM Method of Test, designation C29-60.

10. Measurement and Payment

All ballast will be paid for by the tonne, and the Supplier/Contractor shall, at his own expense, provide, install, maintain, and remove scales of sufficient capacity for the measurement of such material. Such scales shall meet the approval of the Rail Infrastructure Department and shall be located at the site where material is produced as directed by a representative of the Rail Infrastructure Department. The Supplier/Contractor shall employ adequate washing of the crushed stone or dust control methods to ensure that the dust from the crushing operation is not carried in the direction of the scales or the stockpile of the prepared stone.

The approach roadway shall be constructed on a flat grade, level with the scale platform for at least one truck length on either side of the platform.

Before commencing to crush, the scales must measure within service limits of error according to Weights and Measures Acts and Regulations. The certification issue by the testing authority of the Government of Canada shall be on view at the scale at all times. Two copies of weight tickets shall be submitted to the Rail Infrastructure Department for every load delivered in this contract with tickets to be provided by the Supplier/Contractor in form required.

An inspector and/or Scaleman may be provided at ONTC's discretion when crushing is in progress.

All trucks used or delivery or finished product from crushing plant to stockpile shall be numbered with tare weight of each truck to be checked daily and shown on weight ticket with truck number. These tickets must be submitted to the Rail Infrastructure Department along with a daily summary of crushing production and stockpiled amounts.

Unit price per tonne of material shall be quoted as follows:

Prepared Stone: To be stockpiled adjacent to the railway at sidings or spurs adjacent to main line track on the Railway System as may be proposed by the Respondent(s) and acceptable to the ONTC.

11. Sources of Raw Material & Storage Sites

Crushed Stone Ballast

The materials for railway ballast can be waste mine rock or other suitable quarry rock, some of which has been primary crushed and should conform with present environmental regulations regarding the mineral content and its suitability for railway ballast. The Supplier/Contractor of the rock will provide ONTC with a certificate of compliance respecting any and all governing environmental regulations by the Ministry of the Environment of Ontario or any other governing agency. The Supplier/Contractor is to accept full responsibility for size, condition, and location of the raw material relative to the designated location of the proposed stone pile of such material.

Also, once the contract has been completed the Supplier/Contractor shall ensure that the angle of repose of the stockpile is acceptable to the Ministry of Labour standards.

All material produced under this contract shall be delivered to storage site and stockpiled as directed above by ONTC.

Construction and maintenance of the access road and storage area during the term of the contract shall be the responsibility of the Supplier/Contractor.

All the fine material produced under this contract shall remain the property of ONTC and if necessary, shall be stockpiled at a mutually acceptable location away from the crushed rock stockpiled. **If Respondents are interested in retaining the fines, they must**

indicate in their Proposal and state whether the unit price for the crushed rock is net of the retention of the fines or identify unit credit for the fines.

RAIL SECTION	DIMENSIONS "A"	"B"max	"B"min	"C"	PART NUMBERS IMPROVED FAIR
132-6 RE	6.062	0.692	0.652	4.594	600-026XX-01
130 REHF	6.062	0.723	0.683	4.594	600-038XX-01
130 PS	5.562	0.819	0.779	4.094	600-035XX-01
127 DUD	6.312	0.630	0.590	4.844	600-046XX-01
115 RE	5.562	0.692	0.652	4.094	600-070XX-01
105 DUD	5.562	0.546	0.506	4.050	600-094XX-01
100 RA	5.562	0.630	0.590	4.094	600-124XX-01
100 CPRE	5.437	0.645	0.605	3.969	600-130XX-01
100 RE	5.437	0.645	0.605	3.969	600-130XX-01
90 RA	5.187	0.614	0.574	3.719	600-160XX-01

RAIL SECTION	DIMENSIONS "A"	"B"max	"B"min	"C"	PART NUMBERS IMPROVED FAIR
85 STD	5.062	0.630	0.590	3.594	600-178XX-01
85 ASCE	5.250	0.552	0.512	3.782	600-168XX-01
85 RA	4.937	0.677	0.637	3.469	600-196XX-01
80 ASCE	5.062	0.526	0.486	3.594	600-202XX-01
80 CNOR	5.062	0.558	0.518	3.594	600-206XX-01
80 RA	4.688	0.677	0.637	3.219	600-216XX-01
80 ABS	4.688	0.587	0.547	3.219	600-753XX-01
75 ASCE	4.876	0.549	0.509	3.407	600-228XX-01
75 OBS	4.875	0.562	0.522	3.147	600-766XX-01
65 OBS	4.500	0.532	0.492	2.833	600-765XX-01

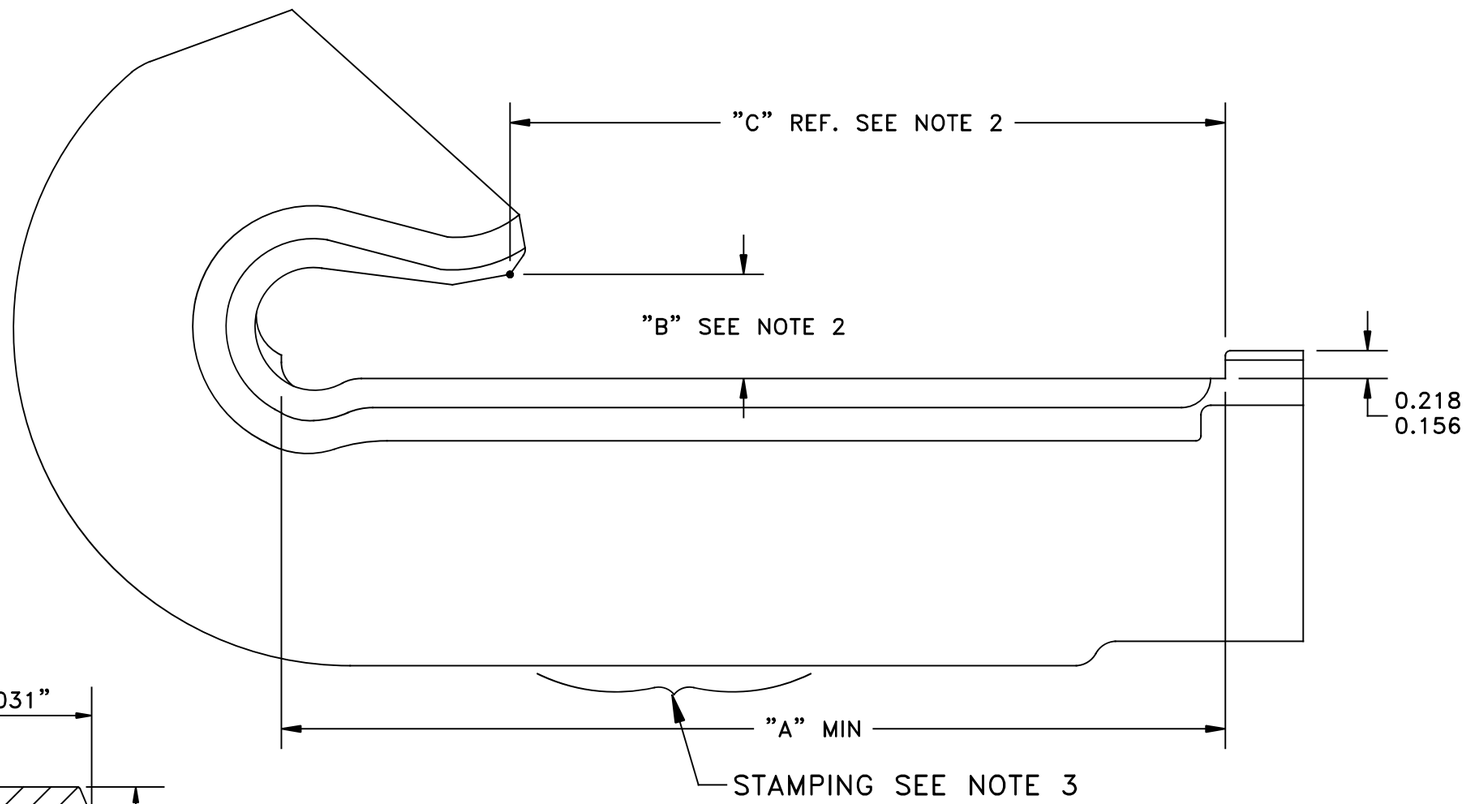

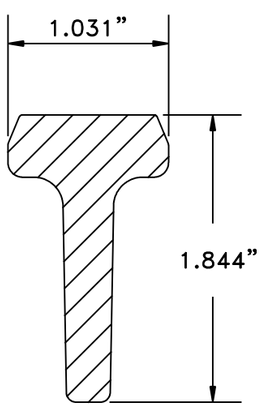

AS ROLLED SECTION
(FOR REFERENCE ONLY)

NOTES:

1. ALL DIMENSIONS IN INCHES.
2. DIMENSIONS "B" AND "C" ARE VERIFIED BY THE USE OF THE RAIL ANCHOR GAUGE.
3. RAIL ANCHORS TO BE STAMPED WITH THE RAIL SECTION AND YEAR OF MANUFACTURE.
4. PART NUMBERS SHOWN ARE FOR BASE UNIT "XX" IS FOR PACKAGING. CALL FOR OPTIONS

SPECIFICATIONS:

MATERIAL: A.I.S.I. C-1060 STEEL
HARDNESS RANGE: 311-401 BRINELL
HOLDING POWER AS PER AREMA SPECIFICATIONS

ISSUE	DATE	REVISION	BY
5	FEB. 07, 2017	TABLE AND SPECS CHANGED	SAS
4	MAR 24, 2016	ADDED 65 OBS UPDATED 75 OBS	RGA
3	JUN 16, 2015	ADDED RAIL SECTIONS	RGA
2	DEC. 4, 2014	REVISED PART NUMBERS	RGA
1	DEC. 3, 2014	ISSUED	RGA

LBFoster
Rail Technologies

UNLESS OTHERWISE SPECIFIED TOLERANCES ARE:
DECIMALS .XX± ——— .XXX± ———
ANGLES ±———
FRACTIONS ±———

NAME
IMPROVED FAIR®
RAIL ANCHORS

DR.	CK.	AP.	DATE	DWG. NO	ISSUE
RGA	GB		DEC. 4, 2014	107-0003	5
DO NOT SCALE DRAWING			SCALE NONE	SIZE B	

THIS DRAWING IS THE PROPERTY OF **Portec Ltd.** AND IS LOANED TO THE RECIPIENT FOR THE PURPOSE OF HIS USE ONLY IN MAINTAINING THE ITEM TO WHICH IT REFERS. THE DRAWING SHALL NOT BE COPIED, OR DUPLICATED, OR ITS POSSESSION TRANSFERRED FOR THE USE OF ANOTHER.

\DWG\ANCHOR\CUSTOMER\107-0003.DWG

90–lb. ARA–A

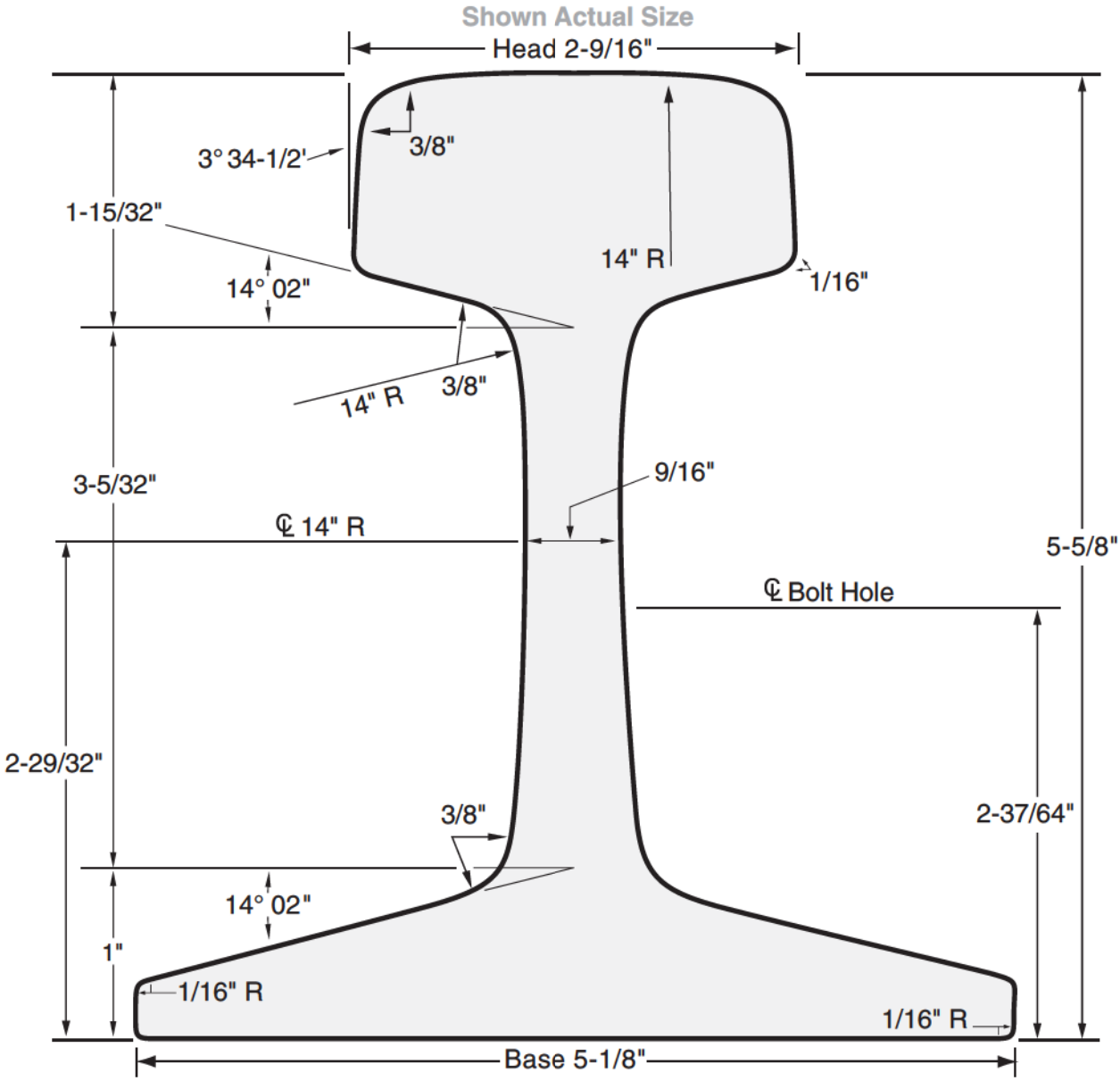

Rail Type:	90 RA
Section Number:	9020
Nominal Weight:	90 lbs/yd
Standard Length:	39'
Standard Drilling:	2-11/16" X 5-1/2" with 1-1/8" dia. holes
Joint & Angle Bar Lgth:	24"
Angle Bar Weight:	60 lbs/pr **with hardware:** 67 lbs/pr
Joint Bar Weight:	46 lbs/pr **with hardware:** 53 lbs/pr
Track Bolt:	7/8" X 5"

Area in^2: 8.82

Section Modulus in^3:
Head: 12.6
Base: 15.2

Moment of Inertia in^4: 38.7

BOLT SIZE MAY VARY DEPENDING ON BAR MANUFACTURE & TYPE OF WASHER USED.

(503) 286-3691 FAX (503) 286-2097 © 2014 www.HarmerSteel.com sales@harmersteel.com

115–lb. AREMA

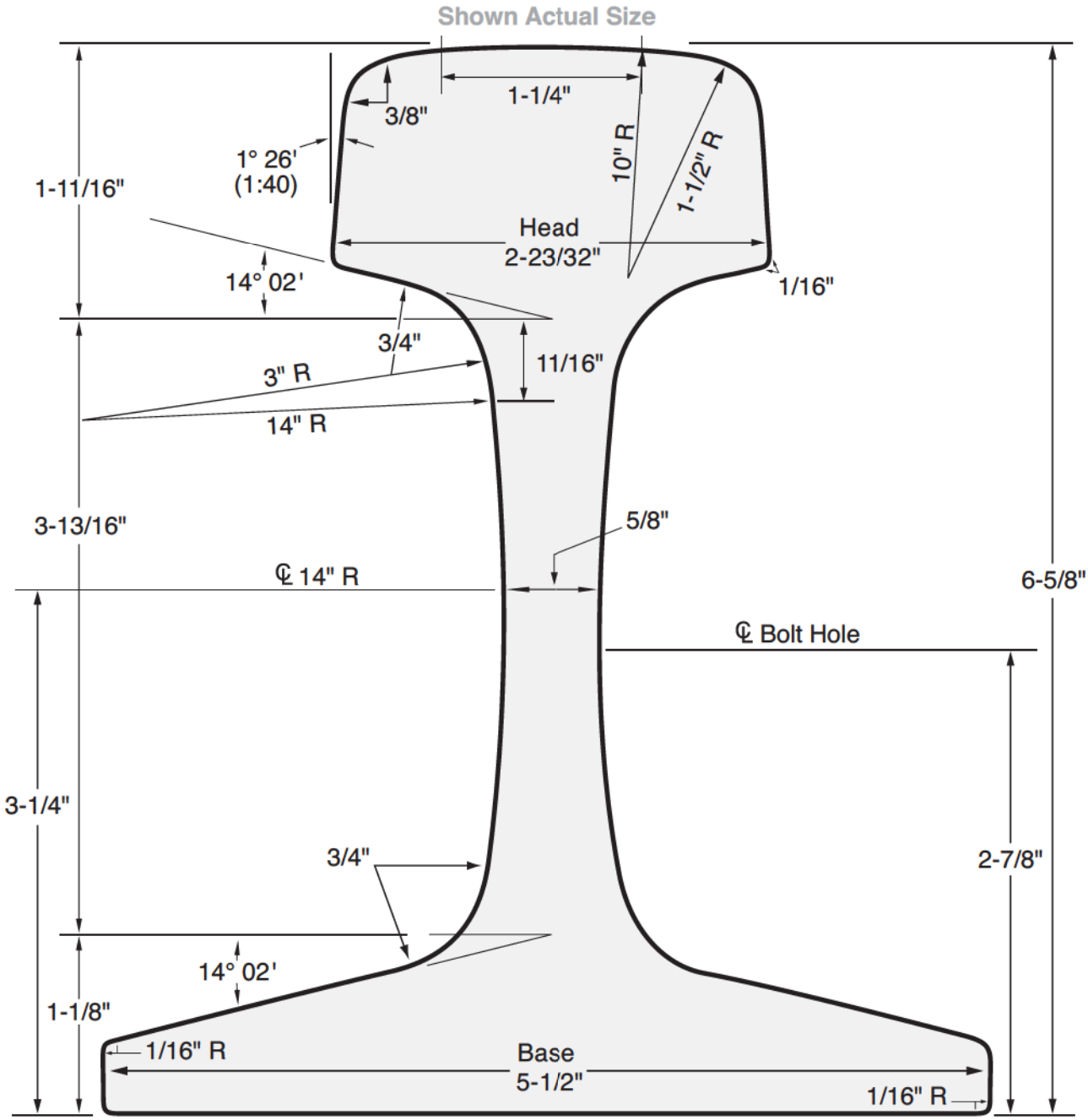

Rail Type:	115 RE
Section Number:	11525
Nominal Weight:	115 lbs/yd
Standard Length:	39', 80'
Standard Drilling:	3-1/2" X 6" or 3-1/2" X 6" X 6" with 1-1/8" dia. holes
Joint Bar Length:	24" or 36"
Joint Bar Weight:	**4-Hole bars:** 68 lbs/pr **with hardware:** 76 lbs/pr **6-Hole bars:** 102 lbs/pr **with hardware:** 110 lbs/pr
Track Bolt:	1" X 6"

Area in^2: 11.25

Section Modulus in^3:
Head: 18.0
Base: 22.0

Moment of Inertia in^4: 65.6

BOLT SIZE MAY VARY DEPENDING ON BAR MANUFACTURE & TYPE OF WASHER USED.

www.HarmerSteel.com sales@harmersteel.com © 2014 (503) 286-3691 FAX (503) 286-2097

Tie Manufacture Specification – Cross and Switch

Material and Manufacture

1. Harwood ties shall be made from beech, maple, ash, oak and birch.
2. All ties must have a boxed heart. Ties manufactured by halving or quartering large logs are not acceptable.
3. All ties shall be made from sound, live, straight timber and shall be free from the following:

   - Decay and Rot
   - Large Knots
   - Unsound Knots
   - Splits over 3”
   - Shakes
   - Slanting Grain
   - Large or Numerous Holes

4. All Ties shall have bark completely removed.

Dimensions

1. Track ties shall be eight (8) feet long with the following face dimensions at the narrowest point:

No. 1 Ties	Shall be squared with dimension of seven (7) inches thick with nine (9) inches width of face.
No. 2 Ties	Shall be squared with dimensions of six (6) inches thick with eight (8) inches width of face.

Variations of one-half (1/2) inch over in thickness will be permitted. Ties may have wane one-half (1/2) inch wide on one or both corners of one side only.

2. Length Tolerance
   a) Cross ties – plus one (1) inch
   b) Switch ties – plus two (2) inches, minus one (1) inch

Machining of Cross Ties

Adzing – Hardwood Ties

1. No adzing required on any tie.

Boring – Harwood Ties

1. No boring is required for any tie.

Creosote Treatment

1. Seven (7) pounds per cubic foot of 50% creosote and 50% petroleum, or;
2. Kopper Creosote Petroleum Solution (Pressure Applications)
3. The ONTC will not be accepting ACZA ties (Crossties / Switch Ties) until we determine if the product is acceptable for our use.

Trimming

1. Trimmed ties shall be cleanly sawed at both ends to the specified length as they pass through the boring and adzing machine.

Branding

1. Branding of the ends of ties as the pass through the machine shall be with letters, figures, or symbols to indicate the following:

   Year: 2024
   Railway: O.N.R.

2. Letter height shall be approximately 1 ½ inches. Dies used for branding shall have a cutting edge of 1/8 inches wide shall indent the wood at least ¼ inch deep

Ontario Northland Railway
Office of the Director Rail Infrastructure September 25, 2023

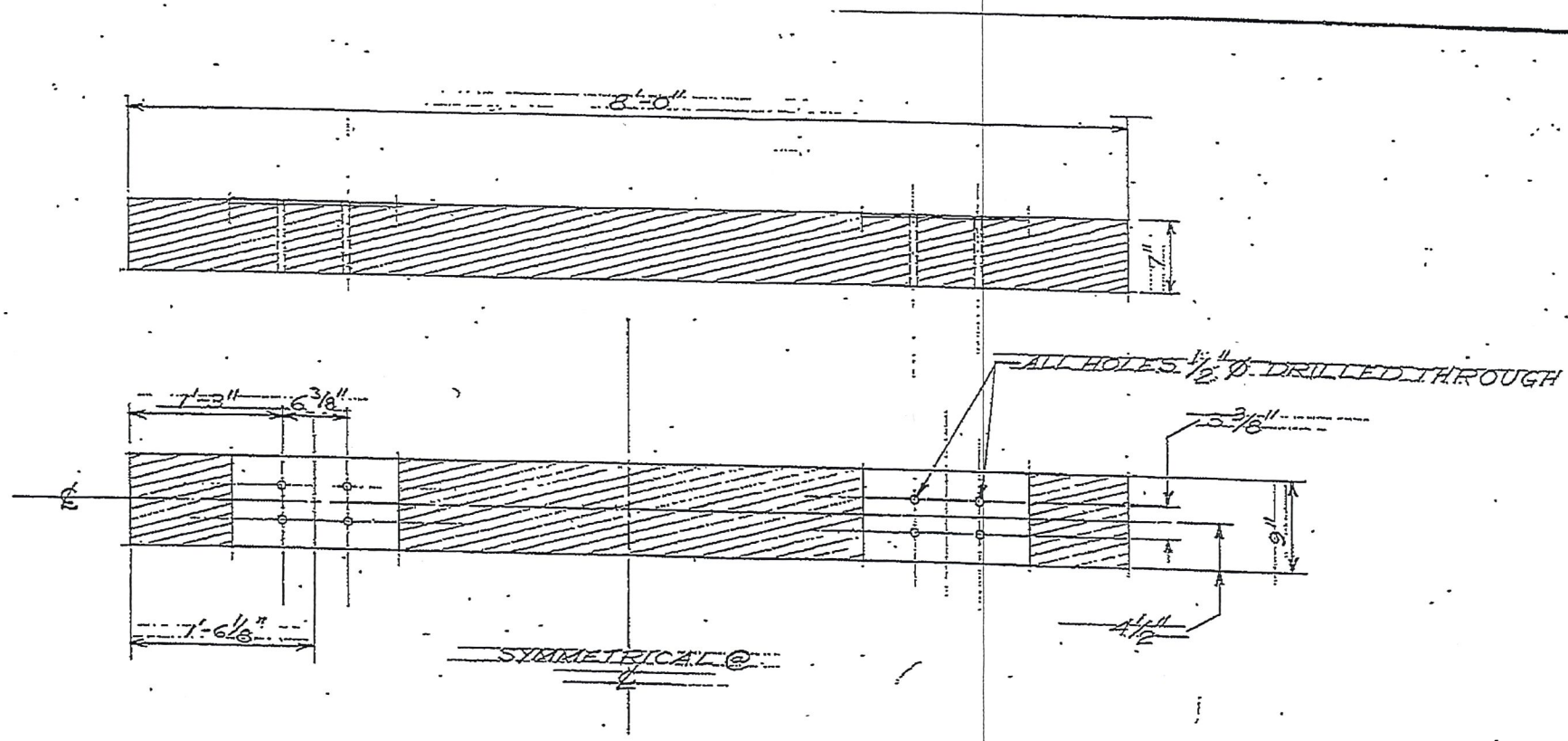

LOCATION	REVISED	DRAWN	ONTARIO NORTHLAND RAILWAY
DESCRIPTION 8'-0" No. 1 HARDWOOD CROSS TIE	PAL - 01/2011	S	ENGINEERING DEPARTMENT — NORTH BAY, ONTARIO
BORING TO BE READ		TRACED	
IN CONJUNCTION WITH SPECIFICATION			CHIEF ENG.
		CHECKED	SCALE 1" = 1'-0" / DATE JANUARY 1988 / NO. A-4585

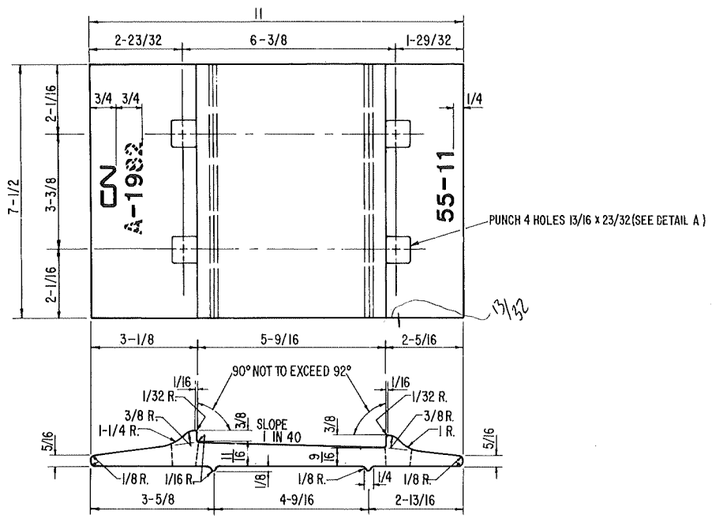

WEIGHT: 13.12 LBS/PLATE

STOCK NUMBER: NEW 01-24-036 P/W 01-24-037

11" TIE PLATE FOR 100/115 RAIL-5-1/2" BASE WIDTH

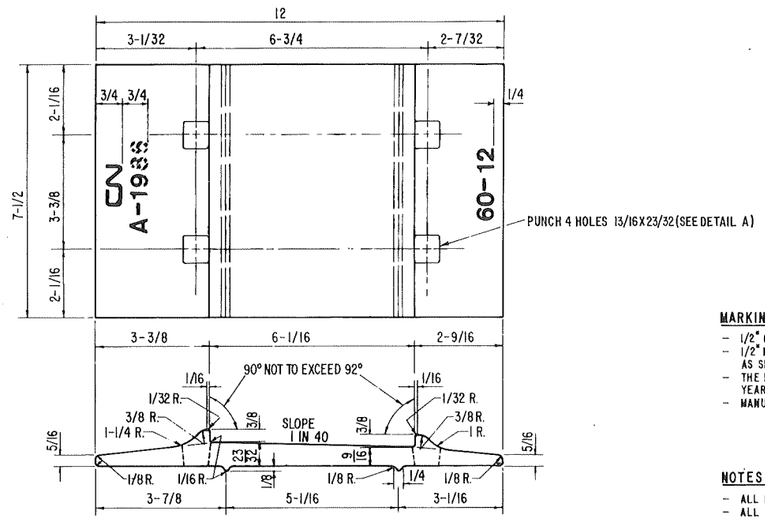

WEIGHT: 14.57 LBS/PLATE

STOCK NUMBER: NEW 01-24-033 P/W 01-24-094

12" TIE PLATE FOR 130/132/136 RAIL-6" BASE WIDTH

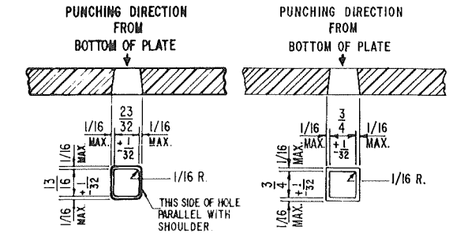

DETAIL A DETAIL B

TOLERANCE DETAILS OF SPIKE HOLES

MARKINGS:

- 1/2" CN SYMBOL TO BE BRANDED PLAINLY ON EACH PLATE.
- 1/2" MIN. PLATE IDENTIFICATION CHARACTERS TO BE BRANDED PLAINLY AS SHOWN.
- THE MANUFACTURERS IDENTIFICATION LETTER AND THE FIGURES OF THE YEAR TO BE BRANDED PLAINLY IN 1/2" MIN CHARACTERS ON EACH PLATE.
- MANUFACTURERS IDENTIFICATION LETTERS:
  - A – ALGOMA STEEL CORPORATION, LTD.
  - H – STEEL COMPANY OF CANADA, LTD.
  - D – SYDNEY STEEL CORPORATION
  - S – ARKANSAS STEEL ASSOCIATES (SUMITOMO)

  ALL CHARACTERS SHALL BE RAISED. 1/32"

NOTES:

- ALL PLATES TO BE IN ACCORDANCE WITH LATEST C.N.R. SPECIFICATION 12-2.
- ALL DIMENSIONS ARE IN INCHES.

TOLERANCES

	OVER	UNDER
THICKNESS	1/32	1/32
ROLLED WIDTH	1/8	1/8
SHEARED LENGTH	3/16	3/16
DISTANCE BETWEEN SHOULDERS	1/16	0
HEIGHT OF SHOULDERS	1/64	1/32
SIZE OF SPIKE HOLES	1/32	1/32
DISTANCE BETWEEN SPIKE HOLES	1/32	1/32
LOCATION OF SPIKE HOLES FROM GAUGING SIDE	1/32	1/32
FLATNESS OF RAIL SEAT	0.025	0.025

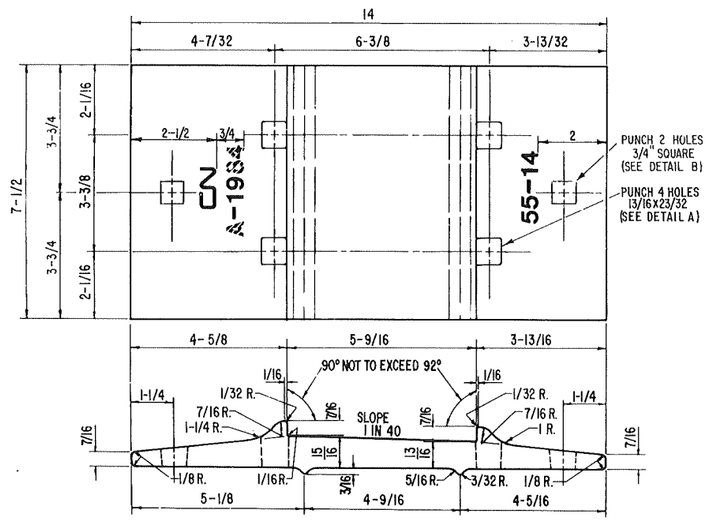

WEIGHT: 22.22 LBS/PLATE

STOCK NUMBER: NEW 01-24-091 P/W 01-24-110

14" TIE PLATE FOR 100/115 RAIL-5-1/2" BASE WIDTH

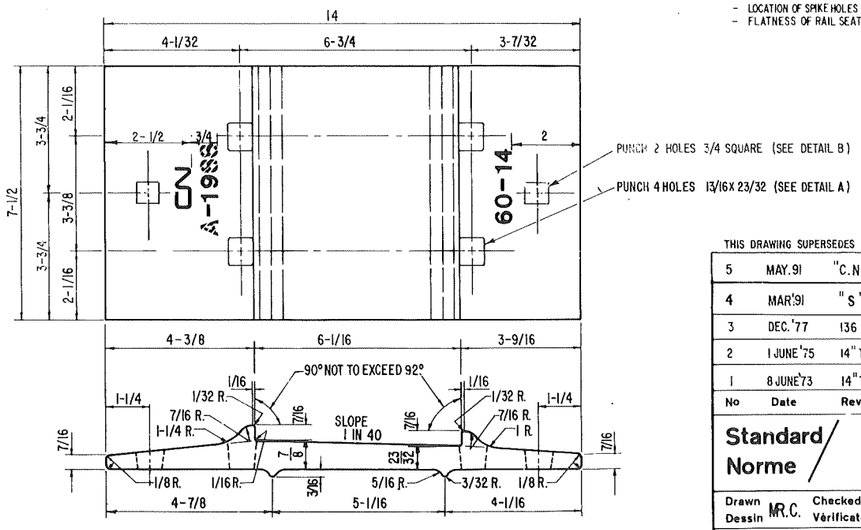

WEIGHT: 20.[illegible] LBS/PLATE

STOCK NUMBER: NEW 01-24-090 P/W 01-24-109

14" TIE PLATE FOR 130/132/136 RAIL-6" BASE WIDTH

THIS DRAWING SUPERSEDES DRAWING NOS. S-13C-5.1, -45.1, -45.2, -46.1, 46,2

No	Date	Revision	
5	MAY.91	"C.N.R." CHANGED TO "CN"	(JM)
4	MAR.'91	"S" MARKING ADDED.	(JM)
3	DEC.'77	136 LB. RAIL ADDED.	
2	1 JUNE'75	14" TIE PLATES WERE PUNCHED 8 HOLE – NOW 6 HOLES.	
1	8 JUNE'73	14" TIE PLATES WERE PUNCHED 6 HOLE – NOW 8 HOLES.	

Standard / Norme

TIE PLATES
DOUBLE SHOULDER
FOR 100, 115, 132 AND 136 LB. RAIL

Drawn / Dessin: M.R.C. Checked / Vérification: N.A.M. Approved / Approbation: Chief Engineer

Office of Chief Engineer
Bureau de l'Ingénieur en chef

CN RAIL

Date: 18 FEB. 1971 Drawing Number / Dessin numéro: TS-501

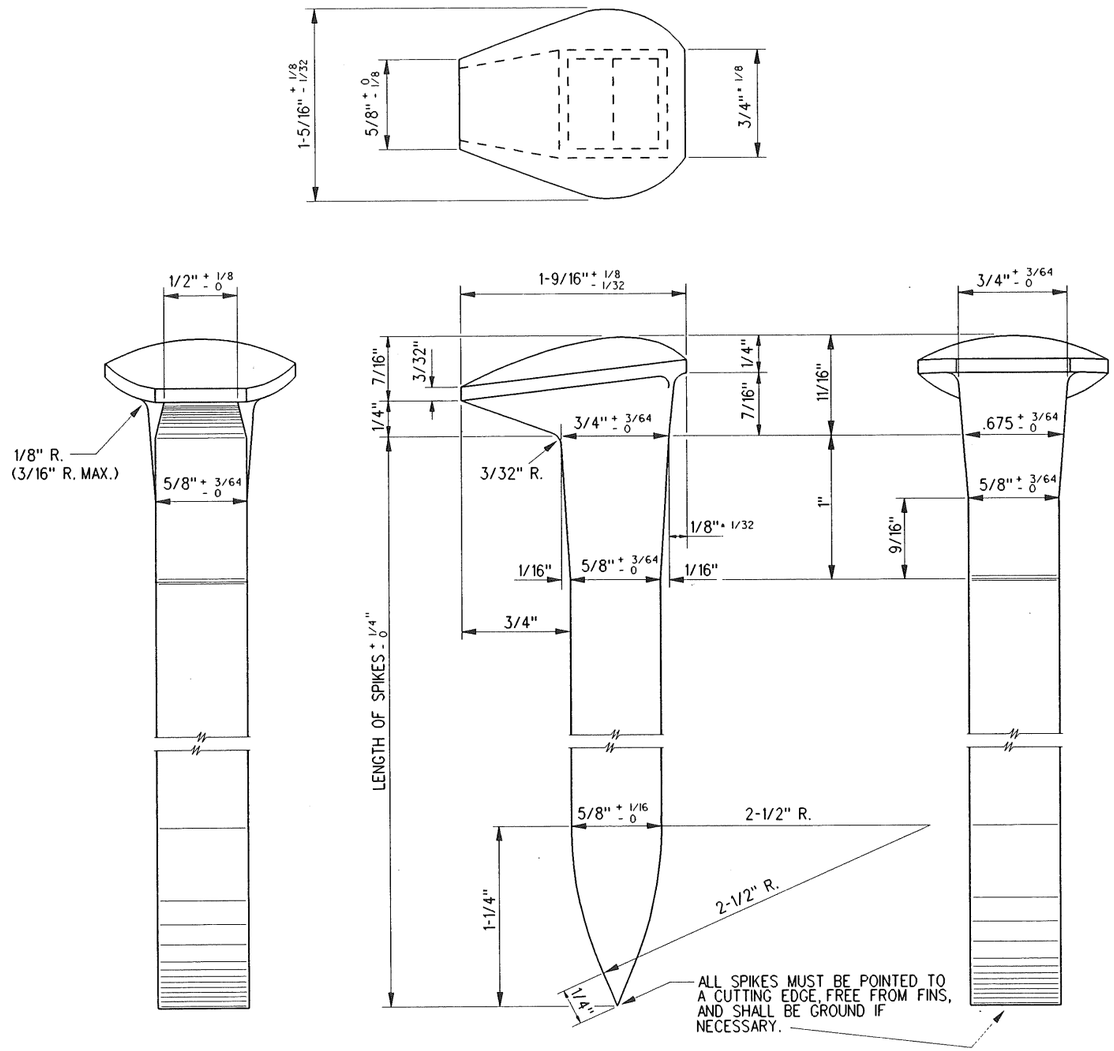

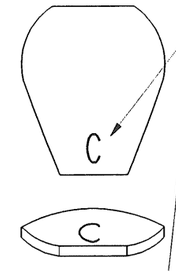

THE MANUFACTURER'S IDENTIFICATION LETTER MUST APPEAR CLEARLY ON ALL SPIKES IN POSITION SHOWN. LETTERS TO BE 1/4 " HIGH AND RAISED 1/32 ".

C - DOMINION STEEL & COAL CORP. LTD.
E - PREMIER STEEL PRODUCTS LTD.
H - STEEL COMPANY OF CANADA LTD.
V - PACIFIC BOLT MAN-WESTERN CAN. STEEL.
- NORTRAK LTD.

IDENTIFICATION MARKINGS FOR TRACK SPIKES

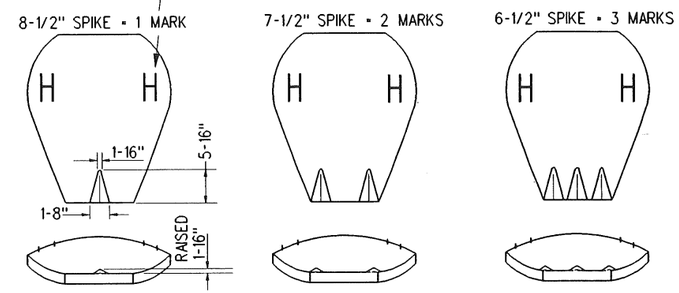

IDENTIFICATION MARKINGS FOR SHIMMING SPIKES

NOTES

- ALL SPIKES TO BE MANUFACTURED IN ACCORDANCE WITH SPECIFICATION 12-6 LATEST DATE.

ITEM	LENGTH	STOCK NUMBERS		WEIGHT
		NEW	PARTLY WORN	
TRACK SPIKE	5-1/2	01-03-012	01-03-013	0.750 LB.
TRACK SPIKE	6	01-41-014	01-41-015	0.813 LB.
SHIMMING SPIKE	6-1/2	01-03-018	01-03-019	0.875 LB.
SHIMMING SPIKE	7-1/2	01-03-021	01-03-022	1.000 LB.
SHIMMING SPIKE	8-1/2	01-03-024	01-03-025	1.125 LB.

THIS DRAWING SUPERSEDES DRAWING NO. S10C-8.1 DATED NOV. 15, 1962 & S10C-8.2 DATED FEB. 1, 1962

No.	Date	Revision
4	JUNE'91	"DISPONIBLE EN FRANCAIS" ADDED.
3	APR.'90	V CHANGED TO PACIFIC BOLT MAN-WESTERN CAN. STEEL.
2	JAN.'89	NOTES REVISED, MARKING UPDATED.
1	JAN.'74	TOLERANCES ALTERED.

Standard / Norme

TRACK & SHIMMING
SPIKES
FOR STANDARD GAUGE

Drawn / Dessin MR.C. Checked / Verification G.W.M. Approved / Approbation Chief Engineer

Office of Chief Engineer
Bureau de l'Ingenieur en Chef

Date SEPT.'73 Plan Number / Dessin numeró TS – 1325

DISPONIBLE EN FRANCAIS

FILE: 1325.ts